ROTAPULS

The low-cost heavy duty solution

Series **SGSM • SGSD**

- Low-cost heavy duty solution
- Sealed housing, IP68
- Redundant version SGSD
- Up to 50 mm hollow shaft
- Outdoor & mobile equipment applications

SGSM • SGSD

ENVIRONMENTAL SPECIFICATIONS	
Operating temperature range:	-40°C ÷ +85°C (-40°F +185°F)
Storage temperature range:	-40°C ÷ +100°C (-40°F +212°F)
Protection:	IP68

MECHANICAL SPECIFICATIONS	
Dimensions:	see drawing
Hollow shaft diameter:	Ø 30, 50 mm
Shaft rotational speed:	10000 rpm max. (mechanical)
Gap sensor-ring:	0,1 ÷ 1,5 mm
Electrical connections:	M12 8 pin inline plug or Lika Hi-flex cable 2,0 m (6.56 ft)
Weight:	~ 200 g (7 oz)
Option:	• additional cable

ELECTRICAL SPECIFICATIONS	
Resolution (PPR):	256, 512, 1024
Accuracy:	± 0,05°
Counting frequency:	100 kHz max.
Output circuits:	Line Driver, Push-Pull
Power supply:	+5Vdc ±5%, +10Vdc ÷ +30Vdc
Consumption:	70 mA max.
Output signals:	AB, /AB
Output current (per channel):	40 mA max.
Protection:	against inversion of polarity and short-circuit (except L circuit)
EMC:	electro-magnetic immunity, EN 61000-4-2 EN 61000-4-4

MATERIALS	
Housing:	Macromelt OM 646-EN
Hub:	Anticorodal, UNI EN AW-6082
Ring:	Plastoferrite

ACCESSORIES	
EM12F8:	M12 8 pin mating connector

Specifications subject to changes without prior notice

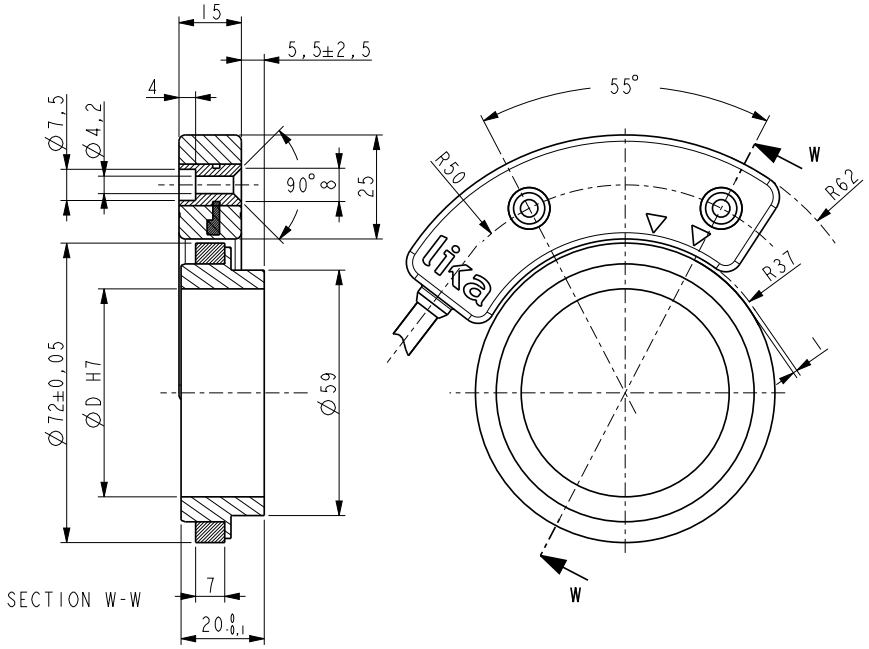

SGSM • SGSD

Order code - Sensor

SGSM SGSD	-	X ⓐ	-	X ⓑ	-	XX ⓒ	-	X ⓓ	-	XX ⓔ	/Sxxx ⓕ

ⓐ **OUTPUT CIRCUITS**
Y = Push Pull (AB, /AB)
L = Line Driver (AB, /AB)

ⓑ **SUPPLY VOLTAGE VS OUTPUT CIRCUIT**
1 = +5V±5% (L output circuit)
2 = +10V÷ +30V (Y output circuit)

ⓒ **RESOLUTION**
16 = 256 PPR
32 = 512 PPR
64 = 1024 PPR

ⓓ **INDEX**
N = without Index

ⓔ **CONNECTIONS**
1 = cable output 1 m
x = cable output x m
M2 = 2 m cable + M12 8 pin inline plug (only SGSM)

ⓕ **CUSTOM VERSION**

Order code - Magnetic ring

MRI	/	XX ⓐ	-	XX-X ⓑ	-	XX ⓒ	/Sxxx ⓓ

ⓐ **RING TYPE**
72 = size 72 with grub screw fixing

ⓑ **MAGNETIC CODING**
64-3 = 64 poles

ⓒ **SHAFT DIAMETER**
30 = 30 mm
50 = 50 mm

ⓓ **CUSTOM VERSION**